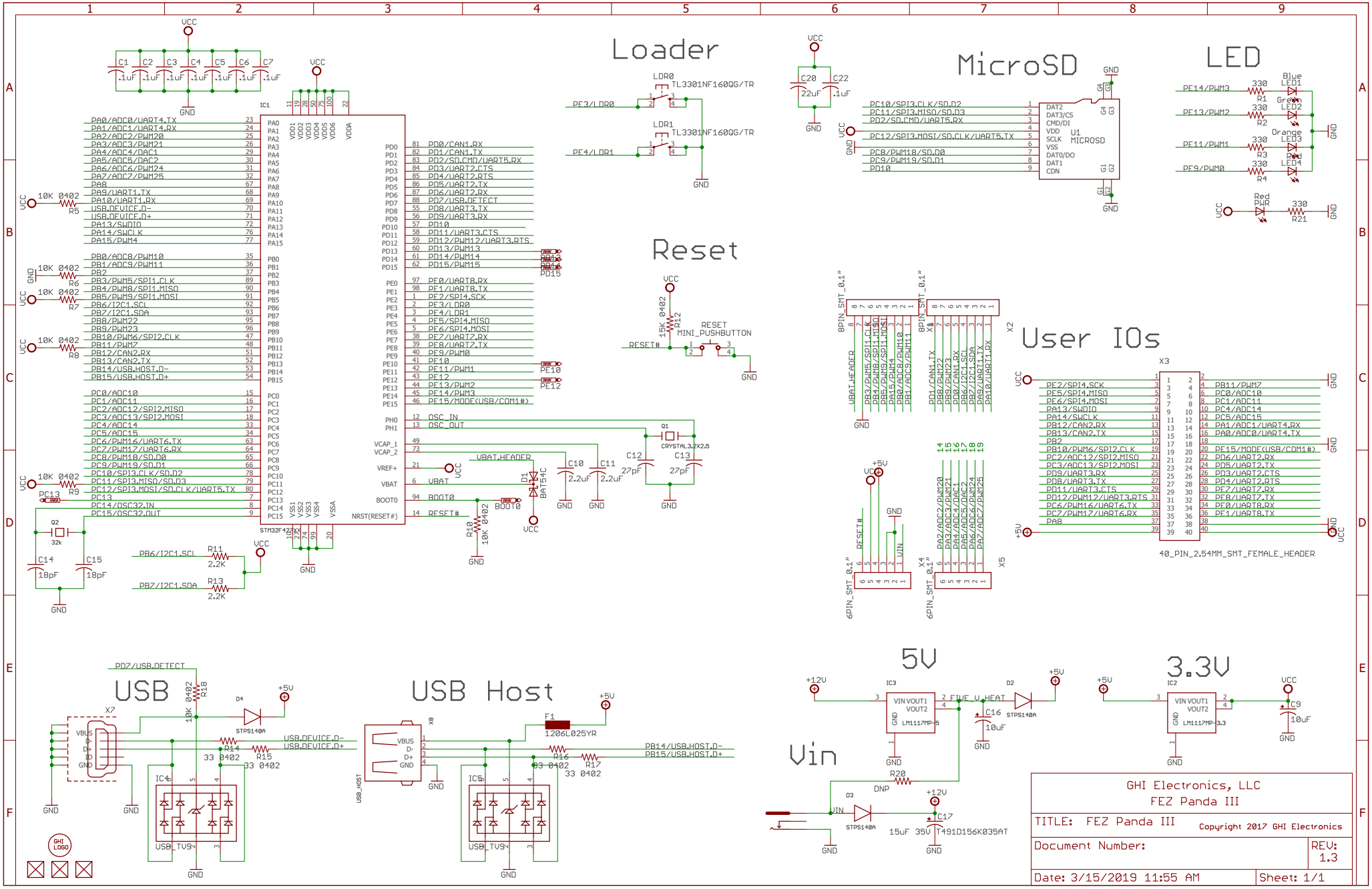
Loader
MicroSD
LED
Reset
User IOs
USB
USB Host
5V
3.3V
Vin
GHI Electronics, LLC
FEZ Panda III
TITLE: FEZ Panda III
Copyright 2017 GHI Electronics
Document Number:
REV: 1.3
Date: 3/15/2019 11:55 AM
Sheet: 1/1