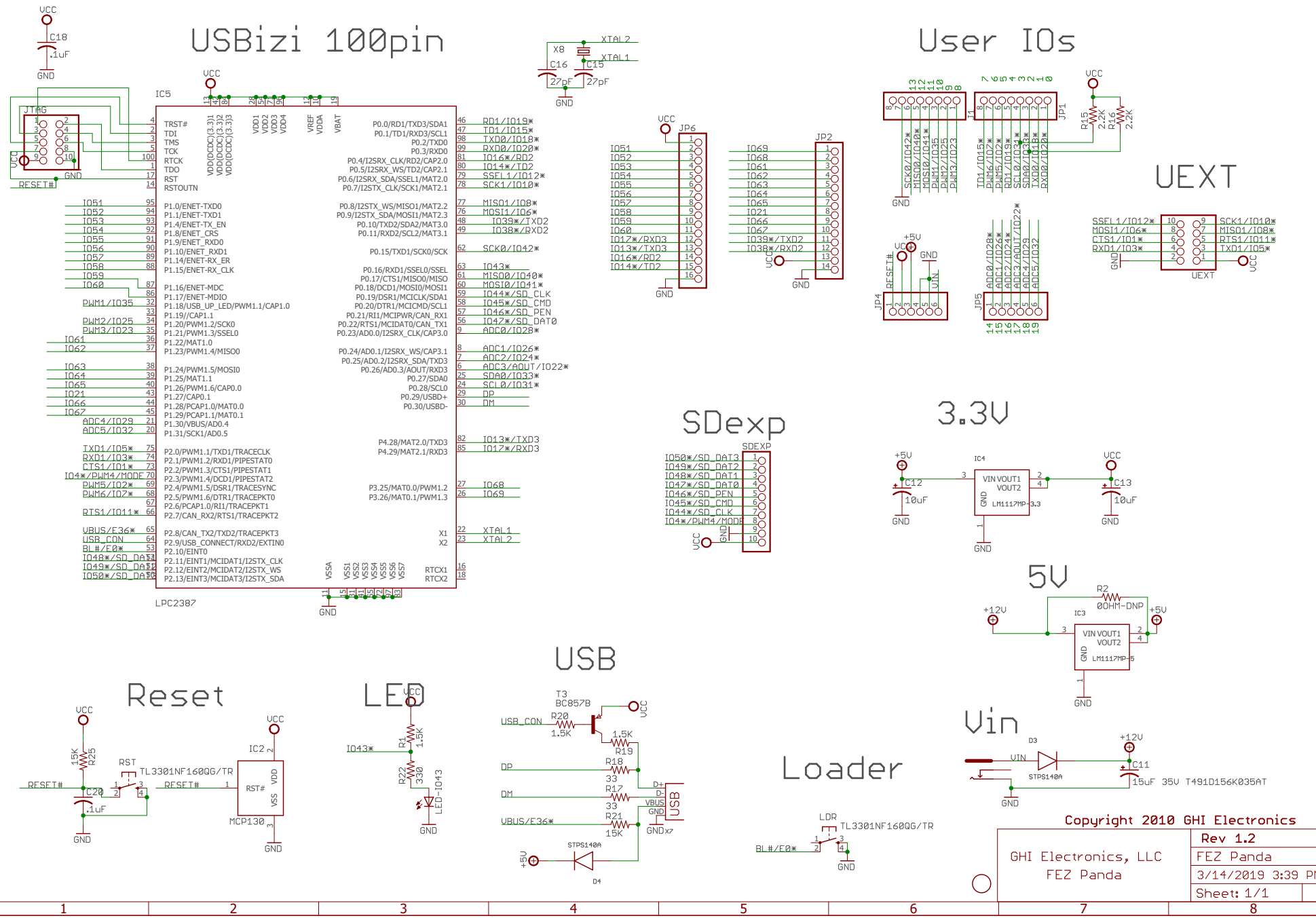
USBizi 100pin
User IOs
UEXT
SDexp
3.3V
5V
Reset
LED
USB
Loader
Vin
IC5
LPC2387
JTAG
JP6
JP2
JP1
JP4
JP5
SDEXP
IC4
LM1117MP-3.3
IC3
LM1117MP-5
IC2
MCP130
TL3301NF160QG/TR
T3
BC857B
STPS140A
D3
D4
LDR
Copyright 2010 GHI Electronics
GHI Electronics, LLC
FEZ Panda
Rev 1.2
FEZ Panda
3/14/2019 3:39 PM
Sheet: 1/1