Raspbery Pi Header

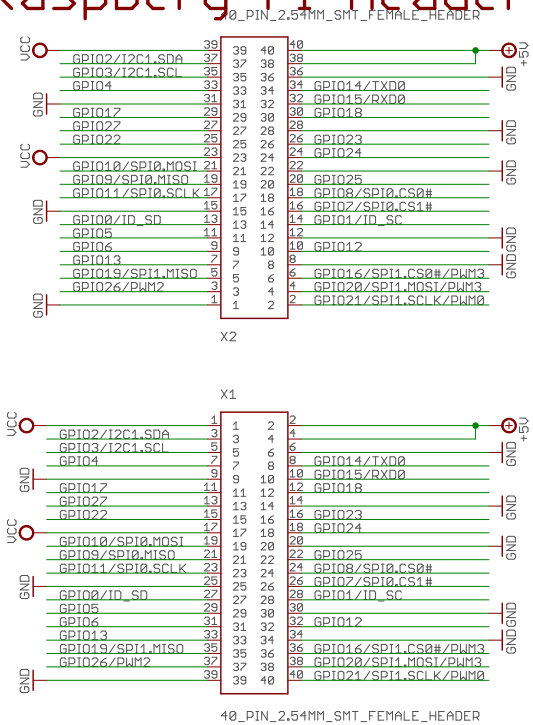

LED

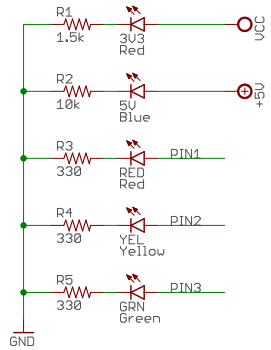

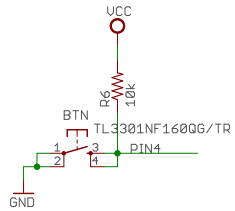

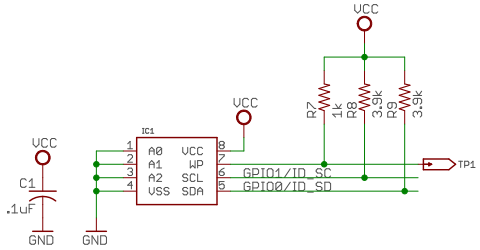

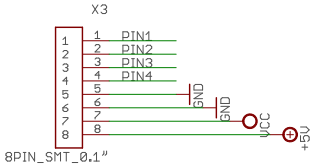

Copyright 2016 GHI Electronics

GHI Electronics, LLC	Rev 1.0
Prototyping Shield	FEZ ProtoPi
	3/14/2019 3:51 PM
	Sheet: 1/1