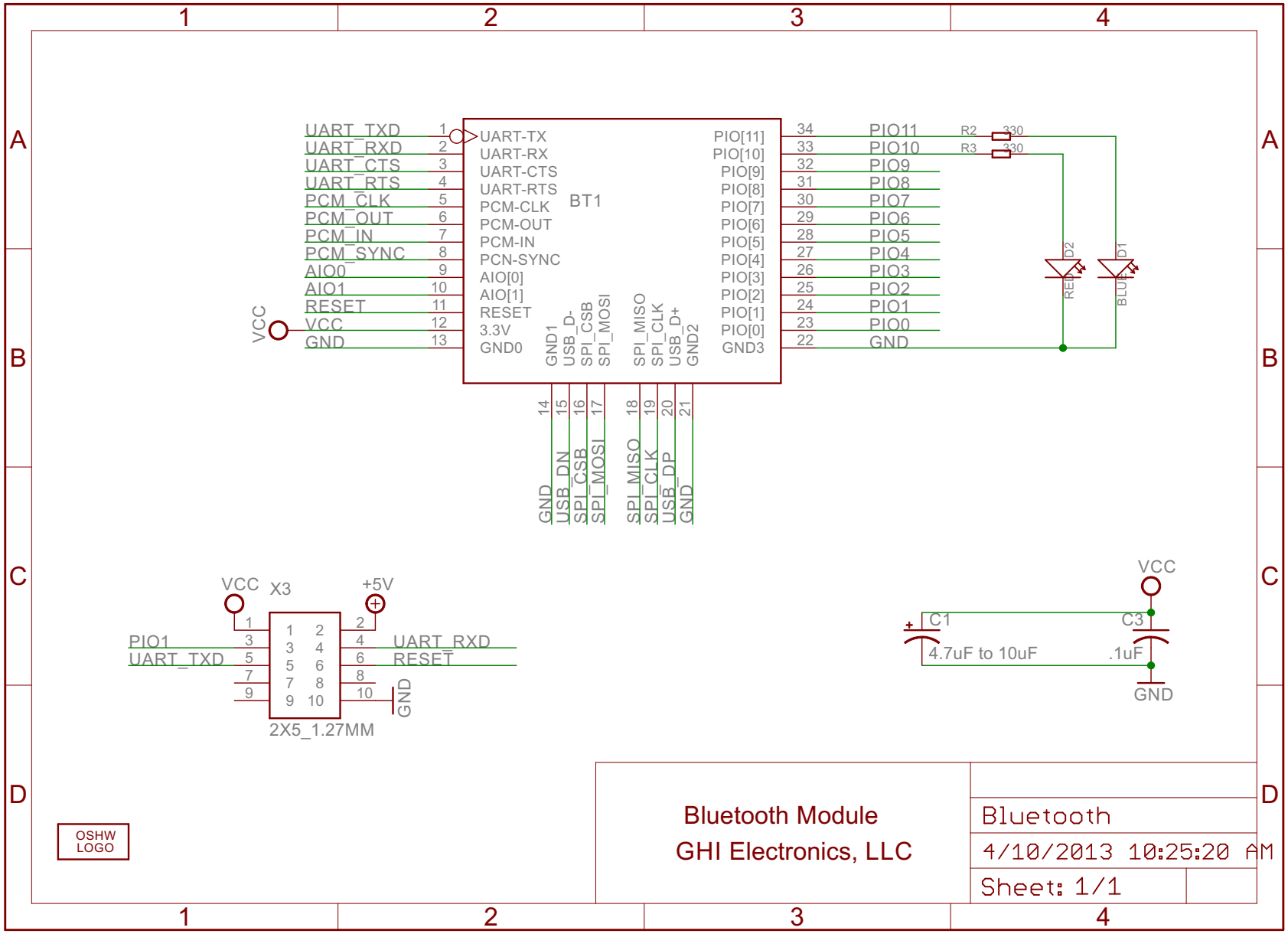
BT1
UART_TXD 1 UART-TX
UART_RXD 2 UART-RX
UART_CTS 3 UART-CTS
UART_RTS 4 UART-RTS
PCM_CLK 5 PCM-CLK
PCM_OUT 6 PCM-OUT
PCM_IN 7 PCM-IN
PCM_SYNC 8 PCN-SYNC
AIO0 9 AIO[0]
AIO1 10 AIO[1]
RESET 11 RESET
VCC 12 3.3V
GND 13 GND0
VCC
14 GND1 GND
15 USB_D- USB_DN
16 SPI_CSB SPI_CSB
17 SPI_MOSI SPI_MOSI
18 SPI_MISO SPI_MISO
19 SPI_CLK SPI_CLK
20 USB_D+ USB_DP
21 GND2 GND
34 PIO[11] PIO11
33 PIO[10] PIO10
32 PIO[9] PIO9
31 PIO[8] PIO8
30 PIO[7] PIO7
29 PIO[6] PIO6
28 PIO[5] PIO5
27 PIO[4] PIO4
26 PIO[3] PIO3
25 PIO[2] PIO2
24 PIO[1] PIO1
23 PIO[0] PIO0
22 GND3 GND
R2 330
R3 330
D2 RED
D1 BLUE
X3
VCC
+5V
PIO1 3
UART_TXD 5
7
9
2 UART_RXD 4
RESET 6
8
GND 10
2X5_1.27MM
C1
4.7uF to 10uF
C3
.1uF
VCC
GND
OSHW LOGO
Bluetooth Module
GHI Electronics, LLC
Bluetooth
4/10/2013 10:25:20 AM
Sheet: 1/1