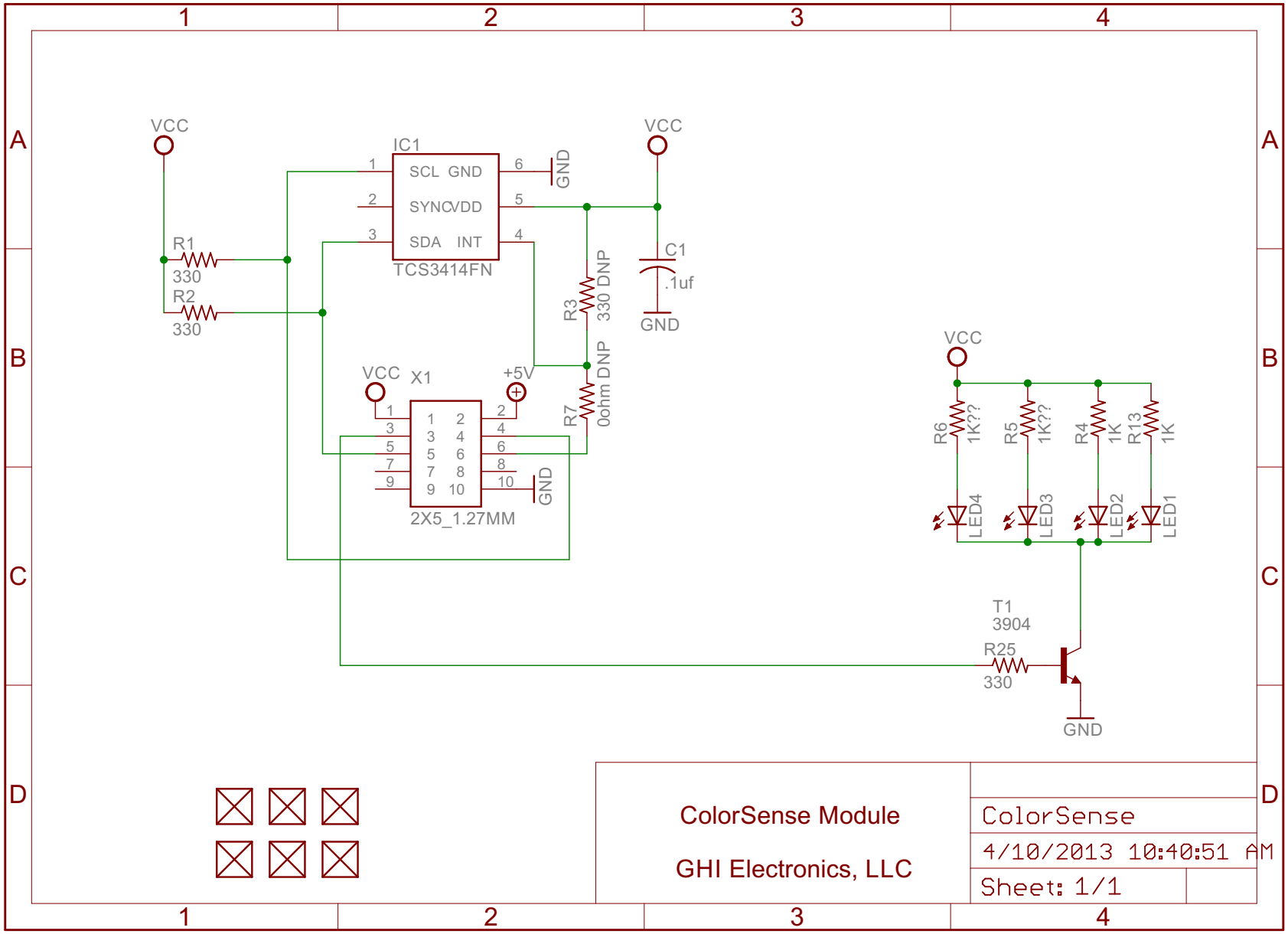
VCC
IC1
SCL GND
SYNC VDD
SDA INT
TCS3414FN
GND
VCC
C1
.1uf
GND
R1
330
R2
330
R3
330 DNP
R7
0ohm DNP
VCC
X1
+5V
2X5_1.27MM
GND
VCC
R6
1K??
R5
1K??
R4
1K
R13
1K
LED4
LED3
LED2
LED1
T1
3904
R25
330
GND
ColorSense Module
GHI Electronics, LLC
ColorSense
4/10/2013 10:40:51 AM
Sheet: 1/1