USB VCOM1

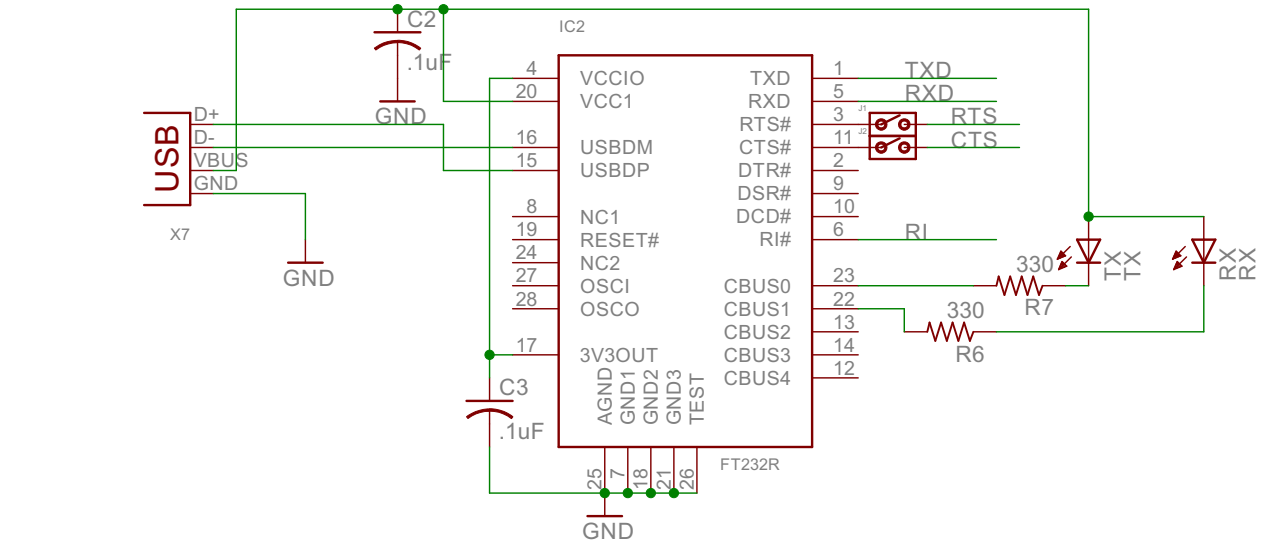

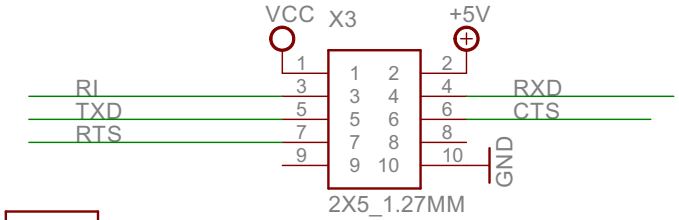

OSHW LOGO

USB Serial Module

GHI Electronics, LLC

USB-Serial

4/10/2013 12:13:27 PM

Sheet: 1/1